Journal of the University of Chemical Technology and Metallurgy, 41, 1, 2006, 69-74

HEAT TRANSFER IN LOW TEMPERATURE CIRCULATING FLUIDIZED BED

D. Karageorgieva, R. Stanev

University of Chemical Technology and Metallurgy
8 Kl. Ohridski, 1756 Sofia, Bulgaria
E-mails: dennizak@yahoo.com, stanev@uctm.edu

Received 14 November 2005
Accepted 06 February 2006

ABSTRACT

The increase of the researchers' interest to the aggregates with a circulating fluidized bed (CFB) working in regime of fast fluidization began in the end the 70s of the last century. These constructions are exploited in aerodynamic regime, in which the gas and the solid material form a overall flow with definite structure. It can be characterized by reduced concentration of upward-flowing particles in the core, surrounded by a dense, discontinued phase of downward-flowing particles, named clusters, in the annular region adjacent to the aggregate wall.

The heat transfer between high temperature CFB and contacting with him bodies, which is typical of this art of furnaces, is a combination radically from convection and radiation. The contribution of each of these mechanisms in the general process is difficult to determine.

In this work is presented an information about a low temperature experimental installation, with which can be investigated the convective heat transfer in CFB. The purpose by the implemented experiments was to observe the influence of some factors on the total heat-transfer coefficient and also on the convective heat transfer one. The obtained results are compared with data from the literature, concerning similar experiments, and they are discussed from a point of view of the theoretical concepts and the empirical information about the process.

Keywords: circulating fluidized bed, heat transfer, low temperature installation, convective heat transfer coefficient.

INTRODUCTION

The CFB aggregates have a number of advantages before the classical stationary fluidized bed (SFB), wherefore they are an object of investigation in a lot of foreign and some our previous works [1-3]. The most typical of their aerodynamic regime is the formation of zone with a low concentration of upward-flowing particles in the core of the reactor. It is surrounded by a dense and intermittent medium of downward-flowing agglomerates of particles, named clusters, which occupy the annular zone near the aggregate wall. In the dense clusters are concentrated most of all solid particles, which are separated from the wall through thin gas film with a thickness of the order of the average particles diameter. In the clusters the convective way for transport of heat predominates [4].

The heat transfer between high temperature CFB and contacting with him bodies, which is typical for the furnaces of this art, is a combination basically between convection and radiation [5]. The contribution of each of these mechanisms in the general process is difficult to determine.

Threshed out more circumstantially, this heat transfer includes some parallel mechanisms:

• gas convection by the wall;

• particle convection, representing heat transfer between the clusters, which are in the zone close to the aggregate wall and are down-flowing, and the wall;

• radiative heat transfer, which according some authors is liable to discriminate in particle and gas radiation [5].

The investigations of CFB aggregates, which work by low temperature, give information only about the convective heat transfer. The results are very important not only for the exploitation of such installations. Thanks to these measurements it can be determined the parts of the gas convection and of the particle convection in the overall high temperature heat transfer in CFB furnaces. With the help of such investigations is established, that 20 % from the general heat flux from and to the CFB are due to the particle convection [5].

For the needs of the reliable design and exploitation of high temperature CFB furnaces' aggregates is necessary these data to be verify with the purpose of their confirmation, enrichment and eventually correction. As an additional positive effect from the clarification of the conditions, by which runs the heat transfer in the CFB furnaces, it can be indicated the improving of their efficiency and the reduction of the fuel consumption in them, what ameliorates as theirs pure technical indexes, as their ecological efficiency.

Since on the particle and gas convection exercise influence some characteristics of the inert material and of the CFB aggregates, in the present work is made an attempt at an enlargement of the information about these dependences on the basis of own and foreign experimental data, by the simultaneous realization of a comparison between them.

Models of the heat transfer in CFB

The basic mechanistic models for describing of the convective heat transfer from the particles of the CFB towards immersed in it body can be systematize in the listed further down groups.

A. Single particle model

The single-particle model is an extension to CFB of the model originally developed for SFB. It concerns the first layer of particles near the wall. It is assumed, that here they are traveling down with an initial temperature equal to it of the bed. Heat is transported from the particles, closest to the wall, to the gas around it. The heat flow immediately to the wall is determined by the heat transfer from the particles to the gas film covering it.

This model gives an account of the particle convection and of the gas conduction.

B. Cluster renewal model

The downward travelling of the clusters to the wall primarily vacates place in the gas boundary layer and the solid particles made annuluses on the furnaces wall. The clusters after some time crumble or detach from the wall. Then they are replaced by new ones. Thus is formed one characteristics length is formed, along it a given cluster is in contact with the wall. Of this segment corresponds a determined clusters residence time near to the wall.

In accordance with this model five factors are existing, which determine the overall convective heat transfer coefficient between the CFB and the wall of the vessel: the gas layer thickness beside the wall, the fractional wall coverage by clusters, the time for contact between the cluster and the wall, cluster void fraction and dilute phase convective heat transfer coefficient.

C. Continuous film model

According to this model, the wall of the CFB aggregate is covered with a continuous film of particles and gas. The up-flowing gas does not come in direct contact with the wall and gas convective component is not computed separately. The solids particles are distributed in the film and are downward flowing. Their quantity is predominant in the area near the wall [6].

The represented briefly models treat the convective heat transfer between CFB and the wall of the vessel. For intensification of the transfer processes, in the laboratory installations often are assembled internal heat exchangers, whose streaming by the CFB is analogical to that of the walls. Therefore the computed by these models values of the convective heat transfer coefficients from the gas $\alpha_{g,conv}$ and from the particles $\alpha_{p,conv}$, W/(m^2.K) are available in most of cases also by the considering of the convection towards immersed in the bed heat exchanger, for example a pipe or another body.

Independently from the model, which is accepted for describing of the transport of heat, the overall heat transfer coefficient α, W/(m^2.K) between high temperature CFB and immersed in it body can be represented by the following way:

$$\alpha = \alpha_{conv} + \alpha_{rad} = f\alpha_{p,conv} + (1-f)\alpha_{g,conv} + \alpha_{rad}, \qquad (1)$$

where with α_{conv} and α_{rad} are marked respectively the convective and the radiative components of the overall heat transfer coefficient, W/(m^2.K), and with f – the fractional area of the wall, covered by the particles.

For the particles, used in the CFB furnaces, the contribution of the convection by them is much more than the gas convection [5, 6].

The relative part of the radiation in the overall transferred heat flux in the high temperature CFB aggregates increases with the reducing of the suspension density [7].

EXPERIMENTAL

In Fig.1 a scheme of the created for the purposes of the present investigation laboratory installation with CFB is shown. Its fundamental components are a cylindrical aggregate 1 with an internal diameter 0,1 m and a height 5,2 m, a cyclone 4, a separator 5 and a L-valve 6 for the returning of the solid material in CFB. The wall of the aggregate is made of plexiglass for visualization of the process. The heat transfer surface is copper serpentine pipe 2 with external diameter 8.10^{-3} m and length 2 m, formed as a cylindrical coil. It is situated coaxial in the aggregate by a height 0,32 m from its bottom. Through the serpentine circulates warm water and by it in- and outlet are placed thermocouples Ni-Cr/Ni, connected with a digital appliance. The bed temperature is measured by another thermocouple of the same materials, which is situated between the coil and the wall of the CFB aggregate.

The represented installation allows the determination of the heat transfer coefficient k, W/(m^2.K) from the water to the bed. For a thin-walled cylindrical pipe its computation can be made using the formula for a flat plane:

$$k = \frac{1}{\frac{1}{\alpha_w} + \frac{\delta}{\lambda} + \frac{1}{\alpha_{conv}}}, \qquad (2)$$

where α_w is the convective heat transfer coefficient from the water to the internal surface of the pipe, W/(m^2.K), δ – its thickness, m, λ – the thermal-conductivity coefficient of the walls material, W/(m.K), and in this case α_{conv} is the convective heat transfer coefficient from the external surface of the pipe to the CFB, W/(m^2.K), which components are defined by the equation (1).

According our calculations $\alpha_w >> \alpha_{conv}$, so that with enough accuracy necessary for the present investigation it can be assumed, that

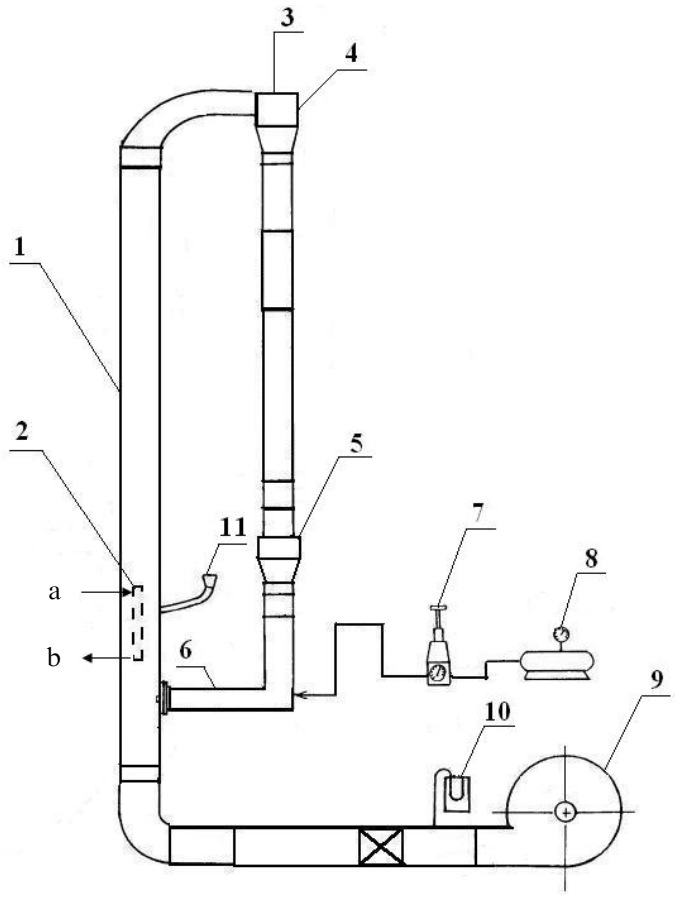

Fig. 1. Scheme of the experimental installation (1 – CFB aggregate; 2 – coil pipe; 3 – filter; 4 - cyclone; 5 - separator; 6 - L-valve; 7 - pressure regulator; 8 - compressor; 9 - blower; 10 - mercury manometer; 11 - solid hopper; a - inlet of the warm water; b - outlet of the cooled water).

$$\frac{1}{\alpha_w} << \frac{1}{\alpha_{conv}} \text{ and } \frac{1}{\alpha_w} \to 0.$$

Furthermore for thin-walled copper pipe, which is used for the elaboration of the coil, it is valid,

that $\frac{\delta}{\lambda} \to 0.$

Then from the equation (2) follows the result $k \approx \alpha_{conv}$.

The experiments are realized with three fractions of sand with a density 2600 kg/m^3 and with average particle diameters 200.10^{-6}, 224.10^{-6} θ 315.10^{-6} m. The mass of the used sand in all experiments is 5 kg.

The carried out experiments in the represented by us installation claim not to be a comprehensive investigation and they have a character of a verification of its efficiency. At the same time their combination with foreign test data allows except the establishment of a good agreement also to study the influence of some factors on α_{conv}.

It should be noted, that all the experiments are carried out by comparable values of the fluidization number:

$$W = \frac{w}{w'}, \quad (3)$$

where with *w'* and *w* are marked the minimal fluidization velocity and the working velocity of the upward-flowing air flux, related to the across section of the empty aggregate, m/s.

RESULTS AND DISCUSSION

In Fig. 2 the dependence of the convective heat transfer coefficient from the particle diameter is illustrated. All researchers unanimously accept that the particles with smaller diameters ensure more intensive heat transfer between SFB and immersed in it body. The influence of the particle size in the CFB aggregates is not so clearly expressed, especially for the high temperature processes, because there observes ambiguously correlation between this factor and the heat transfer mechanism [6].

As in the case only the convective heat transfer is investigated, in Fig. 2 well expressed tendency

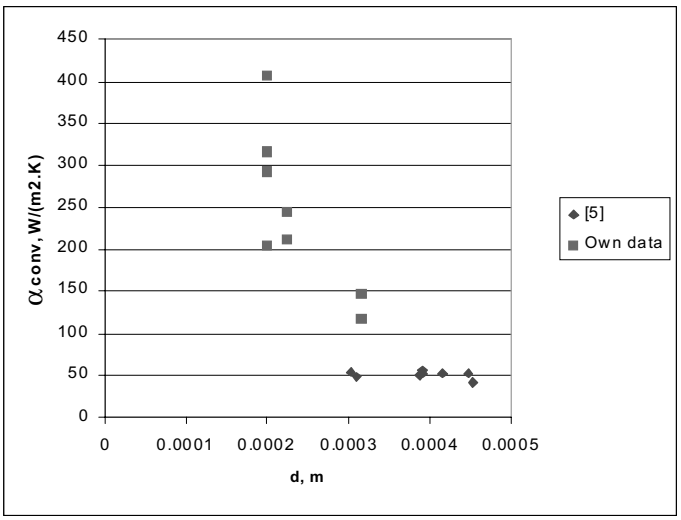

Fig. 2. Dependence of the convective heat transfer coefficient between CFB and placed in it body from the particle diameter.

to enhancing of the indicator with decreasing of the average diameter of the solid phase in CFB is observed.

Fig.3 visualizes the influence of the diameter of the aggregate on the convective heat transfer coefficient between CFB and situated inside body. It is obvious the tendency to increasing of the intensity of the heat transfer with raising of the vessels size, which can be explained with the improvement of the conditions for circulation of the clusters and of the single particles. It is worth noting the good agreement between our and foreign data.

In Fig. 4 is demonstrated the influence of the diameter of the coil pipe on the heat transfer coeffi-

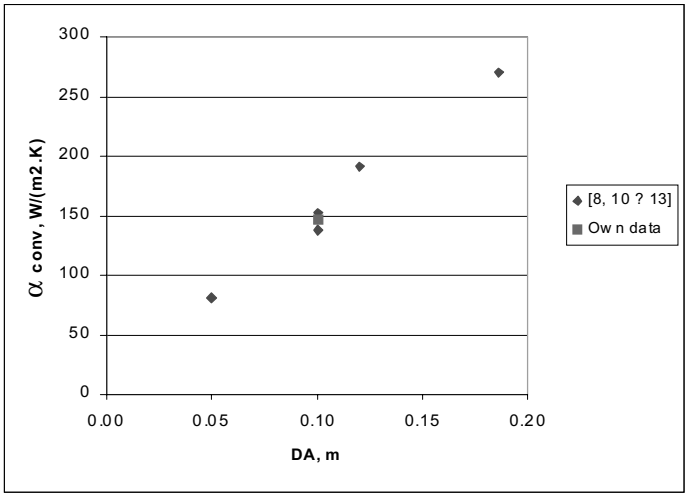

Fig. 3. Dependence of the convective heat transfer coefficient between CFB and placed in it body from the diameter of the aggregate.

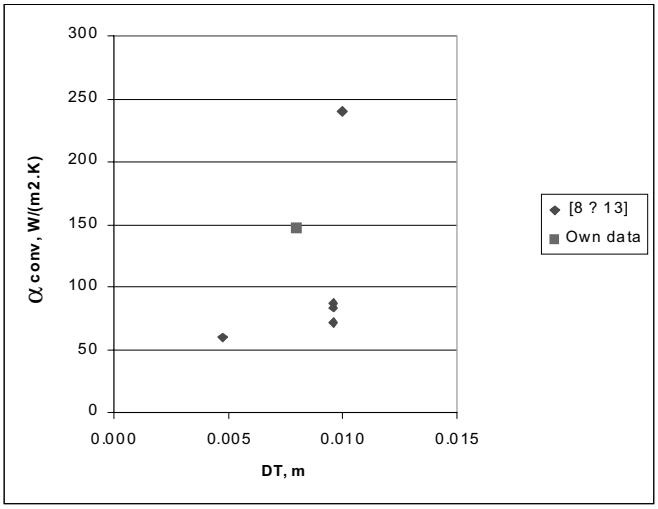

Fig. 4. Dependence of the convective heat transfer coefficient between CFB and placed in it body from the diameter of coil pipe.

cient between the pipe and the bed. A part of the experimental data, which are received by an external diameter of the heat transfer pipe 0,01 m [8], shows a deviation from the appearing tendency of increasing of the coefficient by using of pipes with a bigger external diameter. It is again notably that our experimental results confirm the observed dependence.

The character of the presented in Fig. 4 correlation can be explained with the fact, that coil pipes with higher values of their external diameters are built in bigger CFB aggregates, with which it is again valid the comment, made on the occasion of Fig. 3.

CONCLUSIONS

The carried out experiments and the comparison within the framework of the present work can be generalized by the following way:

It is represented a new experimental installation for investigation of the convective heat transfer in low temperature CFB.

Own results for the heat transfer between CFB and placed in it coil pipe, which are received by experiments in the described installation, ŭre compared with the data from the literature for tests, implemented by comparable conditions. It is established a very good agreement between them which can serve also for a mutually confirmation of the correctness of the experiments.

It is studied the influence of some of the most important geometric characteristics of the CFB installations on the convective heat transfer coefficient between the bed and placed in it solid body. An attempt was made for the interpretation of the obtained results from of the physical concepts for the process point of view.

REFERENCES

1. R.D. Stanev, Technicheska Misal, **36**, 3-4, 1999, 96-101, (in Bulgarian).
2. R.D. Stanev, Journal of Mining and Metallurgy, **35**, 4B, 1999, 434-442.
3. R.D. Stanev, D.P. Karageorgieva, Sbornik ot Dokladi pred Godishnata Nauchna Sesia s Mejdunarono Uchastie na TU – Varna, Varna, 2004, p. 796-803, (in Bulgarian).
4. L.R.Glicksman, P.D. Noymer, Chemical Engineering Science, **55**, 2000, 5283-5289.
5. R. Zevenhoven, J. Kohlmann, T. Laukkanen, M. Tuominen, A.-M. Blomster, Proceedings of the 15th International Conference on Fluidized Bed Combustion, Savannah, Georgia, 1999, ASME 1999, Paper No FBC99-0097.
6. P.Basu, P.K. Nag, Chemical Engineering Science, **51**, 1996, 1-26.
7. D.Xie, B.D. Bowen, J.R. Grace, C.J. Lim, International Journal of Heat and Mass Transfer, **46**, 2003, 2179-2191.
8. K.A. Kolar, R. Sundaresan, International Journal of Thermal Sciences, **41**, 2002, 673-681.
9. K.D. Kiang, K.T. Liu, H. Nack, J.H. Oxley, in: Fluidization Technology, Vol. 2, Hemisphere, Washington, DC, 1975, p. 471–483.
10. Q.Y. Zheng, X. Wang, X. Li, in: P. Basu, M. Horio, M. Hasatani (Eds.), Circulating Fluidized Bed Technology III, Pergamon Press, Canada, 1991, p. 263–268.
11. H. Bi, Y. Jin, Z. Yu, D. Bai, in: P. Basu, M. Horio, M. Hasatani (Eds.), Circulating Fluidized Bed Technology III, Pergamon Press, Canada, 1991, p. 233–238.
12. G. R. Ahn, G. Y. Han, J. Chem. Eng. Japan, **30,** 1997, 421–426.
13. G. Mincic, B. Stojanovic, M. Stojiljkovic, B.

Blagojevic, in: 1st South-East European Symposium on Fluidized Beds in Energy Production, Chemical and Process Engineering and Ecology, Ohrid, Republic of Macedonia, 1997, p. 335–344.